Dual Axis RS-485 Inclinometer
Part Number: 0729-1754-99

Operating Specifications

Interface	RS-485
Supply Voltage	3.3 V DC to 5 V DC
Supply Current	9 mA (5 V DC), 6 mA (3.3 V DC)
Analog Input Resolution	16 bits (10 bits oversampled)
Operating range	±60°
Linear Range	±25°
Axes of Measurement	2
Repeatability	±0.1°
Resolution	≤0.003°
Null Offset	±5°
Long Term Stability/Drift	≤0.1°
Null Temperature Coefficient	≤0.006° per °C
Scale Temperature Coefficient	0.1% per °C
Operating Temperature	-40 °C to 85 °C
Storage Temperature	-40 °C to 125 °C
Temperature Sensor Range	-40 °C to 125 °C
Time Constant (63.2% of output)	≤100 ms

Physical Characteristics

Housing	None (PCBA)
Electrical Connections	7 Pin, 2.54 mm (0.1”) spacing
Weight	5.5 g
Length	31.8 mm (1.25”)
Width	31.8 mm (1.25”)
Height	16 mm (0.63”)
Hole Center	26.7 mm (1.05”)

RS-485 Commands (assume default address 99)

***9911#**	X axis output (0 to 65535)
***9921#**	Y axis output (0 to 65535)
***9941#**	Temperature output (0 to 1023)
***9980#**	Read product information
***9981Axx#**	Change address to xx (01 to 99)
***9982D#**	Read user information
***9984Z#**	Set current position as zero
***9984R#**	Clear saved zero position
***9988Rx#**	Change baud rate to x (1 to 6)
***9989B#**	Reset to factory default settings

Note: See the 1-6200-008 manual for additional commands and details.

Electrical Connections

J1 Pin 1 (+5)	Supply (+)
J1 Pin 2 (C)	Supply (-)
J1 Pin 3 (C)	Ground
J1 Pin 4 (B)	RS-485 B (-)
J1 Pin 5 (A)	RS-485 A (+)
J1 Pin 6 (C)	Ground
J1 Pin 7 (C)	Ground
L1	Dual axis sensor connection
J3	Single axis sensor x axis connection
J4	Single axis sensor y axis connection

Certifications and Ratings

- RoHS

Description

The 0729-1754-99 dual axis RS-485 inclinometer includes the 0717-4318-99 Fredericks TrueTilt™ wide-range, dual-axis electrolytic tilt sensors and 1-6200-008 signal conditioning electronics. This inclinometer has superior tolerances and unit to unit performance with an economic design, making it an excellent solution for a variety of applications in many markets and industries.

Benefits

- Exceptionally high resolution, repeatability, and accuracy
- Very low power consumption
- Extremely long service life with less drift than MEMS tilt sensors
- Superior performance in extreme temperatures/environments
- Excellent customer support
- Designed and manufactured in the United States of America

Applications

- Construction, agricultural, and forestry vehicles and machinery
- Aerial work platforms (AWP), elevating work platforms (EWP)
- Mobile elevating work platforms (MEWPS)
- Scissor lifts (height sensor)
- Telescopic and articulating boom lifts (boom angle sensor)
- Solar tracking

View a full list of applications on The Fredericks Company website at www.gd-antai.com. (blue link from contact information)

Operating Range Output Behavior

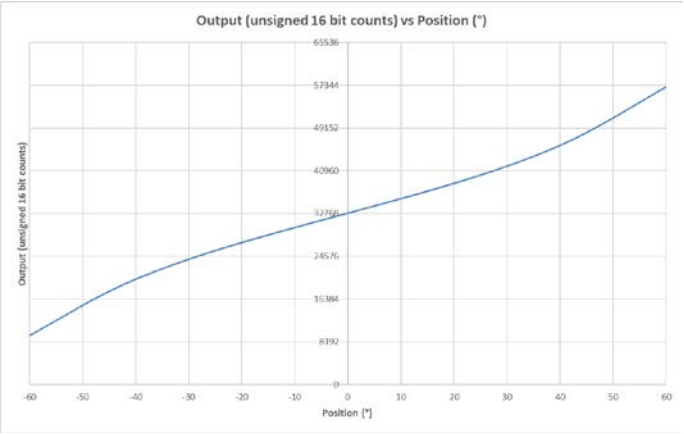

Pin Diagram and Direction of Measurement

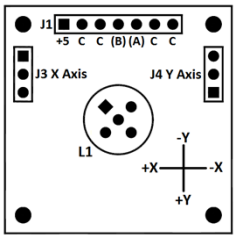

Dual Axis RS-485 Inclinometer
Part Number: 0729-1754-99

RS-485 Information

Baud Rate (default 9600)	1200 to 38400
Data Bits	8
Parity	None
Stop Bits	1
Address (default 99)	01 to 99
Maximum Signal Conditioners on Bus	32

Mounting Notes

The 0729-1754-99 and all inclinometers in this series must be mounted horizontally (parallel to the surface of the earth and perpendicular to the force of gravity). For best performance, isolate the unit from vibrations when mounting it.

Related Products

Dual Axis Electrolytic Inclinometers (PCBA)	
0729-1751-99	±60˚ range, SPI communications
0729-1752-99	±60˚ range, RS-232 communications
0729-1753-99	±60˚ range, analog and PWM output
Dual Axis Electrolytic Inclinometers (Enclosed, IP67)	
0729-1755-99	±60˚ range, analog 0 to 5 V DC output
0729-1759-99	±60˚ range, RS-232 communications
0729-1760-99	±60˚ range, RS-485 communications
0729-1760-04	±10˚ range, RS-485 communications
Dual Axis MEMS Inclinometers (Enclosed, IP67)	
0750-9002-99	±90˚ range, RS-485 communications
0750-3002-99	±30˚ range, RS-485 communications
0751-9002-99	±90˚ range, analog 0.5 to 4.5 V DC output
0751-3002-99	±30˚ range, analog 0.5 to 4.5 V DC output

Dimensional Drawings

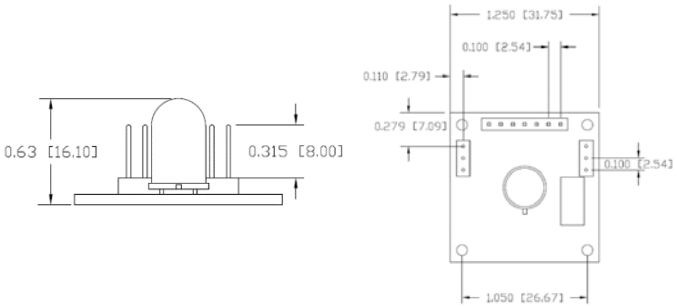

Example RS-485 Bus Configuration

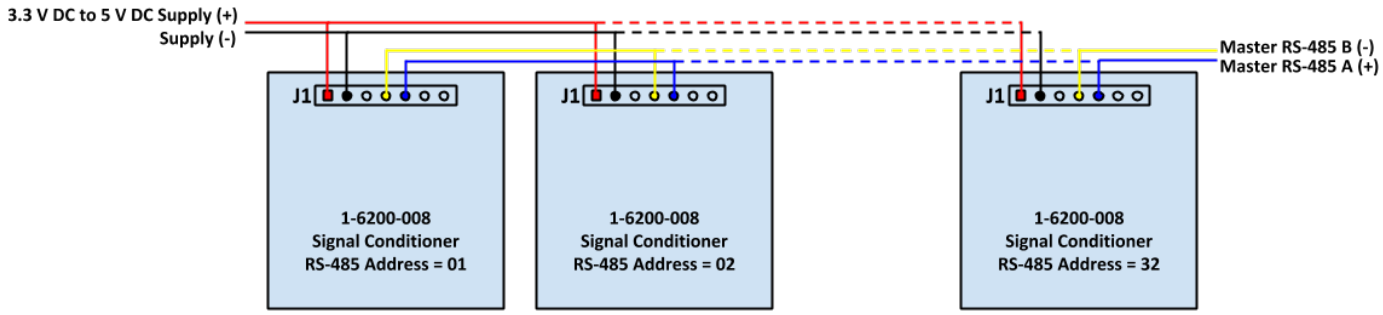

Example RS-485 Command and Response Byte Values

Retrieve X axis tilt value from a signal conditioner with address 99 which returns 32768 (0° tilt):

Command

Byte	0	1	2	3	4	5
ASCII	*	9	9	1	1	#
Hex	0x2A	0x39	0x39	0x31	0x31	0x23

Response

Byte	0	1	2	3	4	5	6
ASCII	3	2	7	6	8	<lf>	<cr>
Hex	0x33	0x32	0x37	0x36	0x38	0x0A	0x0D

Converting Temperature Values

The board temperature output is a 10-bit value (0 to 1023). To convert that value to a temperature in °C, use the following equation:

Temperature in °C = (((output/1023)*supply voltage)-0.5)/0.01

Company Information

Tilt measurement products and sensors that set standards - Fredericks' comprehensive TrueTilt™ tilt sensor product portfolio offers electrolytic tilt sensors, inclinometers, and tilt switches. Patented and engineered to outperform competing technology, our tilt sensors are not just repeatable, but highly accurate with high resolution. Our tilt measurement products have no planned obsolescence and serve industries ranging from construction and RV leveling to aerospace and everything in between.